( ) Preliminary Specification
(V) Final Specification

Module	18.5” Color TFT-LCD
Model Name	G185HAN01.0

Customer	Date	Approved by	Date
		Crystal Hsieh	2016/06/29
Approved by		**Prepared by**	
		Athena Wu	2016/06/29
Note: This Specification is subject to change without notice.		Desktop Display Business Group / AU Optronics corporation	

Provided by www.display-solution.com info@display-solution.com

Contents

1.0 Handling Precautions 5
2.0 General Description 6
2.1 Display Characteristics 6
2.2 Optical Characteristics 7
3.0 Functional Block Diagram 10
4.0 Absolute Maximum Ratings 11
4.1 TFT LCD Module 11
4.2 Absolute Ratings of Environment 11
5.0 Electrical characteristics 12
5.1 TFT LCD Module 12
5.1.1 Power Specification 12
5.1.2 Signal Electrical Characteristics 13
5.2 Backlight Unit 14
6.0 Signal Characteristic 15
6.1 Pixel Format Image 15
6.2 The input data format 16
6.3 Signal Description 17
6.4 Timing Characteristics 19
6.5 Timing diagram 20
6.6 Power ON/OFF Sequence 21
7.0 Connector & Pin Assignment 22
7.1 TFT LCD Module 22
7.2 LED Backlight Unit: LED Driver Connector 22
7.3 LED Driver Connector Pin Assignment 23
8.0 Reliability Test 24
9.0 Shipping Label & Packaging 25
9.1 Shipping Label 25
9.2 Packaging 26
9.3 Palletizing 27
10.0 Mechanical Characteristics 28
11 Safety 30
11.1 Sharp Edge Requirements 30
11.2 Materials 30
11.3 Capacitors 30
11.4 National Test Lab Requirement 30

Provided by www.display-solution.com info@display-solution.com

Record of Revision

Version & Date	Page	Old description	New Description
0.0 / 2015/09/21			Preliminary Specification
0.1 / 2016/06/29	5	Optical Response Time [msec] TBD Nominal Input Voltage VDD [Volt] 5 V (Typ) Power Consumption (VDD line + LED line) [Watt] 16.5W Weight [Grams] TBD (Typ)	Optical Response Time [msec] 20ms Nominal Input Voltage VDD [Volt] 5 V (Typ) Power Consumption (VDD line + LED line) [Watt] 16.5W Weight [Grams] 1200 (Typ)
	6	Item / Unit / Conditions / Min. / Typ. / Max. Viewing Angle [degree] Horizontal (Right) CR >10 (Left) — TBD — Vertical (Up) CR > 10 (Down) — TBD — Response Time [msec] Raising Time (T_{rR}) — TBD TBD Falling Time (T_{rF}) — TBD TBD Raising + Falling — TBD TBD Color / Chromaticity Coordinates (CIE) Red x TBD TBD TBD Red y TBD TBD TBD Green x TBD TBD TBD Green y TBD TBD TBD Blue x TBD TBD TBD Blue y TBD TBD TBD	Item / Unit / Conditions / Min. / Typ. / Max. Viewing Angle [degree] Horizontal (Right) CR >10 (Left) — 89 — Vertical (Up) CR > 10 (Down) — 89 — Response Time [msec] Raising Time (T_{rR}) — 10 20 Falling Time (T_{rF}) — 10 20 Raising + Falling — 20 40 Color / Chromaticity Coordinates (CIE) Red x 0.596 0.646 0.696 Red y 0.283 0.333 0.383 Green x 0.255 0.305 0.355 Green y 0.565 0.615 0.665 Blue x 0.105 0.155 0.205 Blue y 0.010 0.060 0.110

Provided by www.display-solution.com info@display-solution.com

Provided by www.display-solution.com info@display-solution.com

1.0 Handling Precautions

1) Since front polarizer is easily damaged, pay attention not to scratch it.
2) Be sure to turn off power supply when inserting or disconnecting from input connector.
3) Wipe off water drop immediately. Long contact with water may cause discoloration or spots.
4) When the panel surface is soiled, wipe it with absorbent cotton or other soft cloth.
5) Since the panel is made of glass, it may break or crack if dropped or bumped on hard surface.
6) Since CMOS LSI is used in this module, take care of static electricity and insure human earth when handling.
7) Do not open or modify the Module Assembly.
8) Do not press the reflector sheet at the back of the module to any directions.
9) In case if a Module has to be put back into the packing container slot after it was taken out from the container, do not press the center of LED lightbar edge. Instead, press at the far ends of the LED light bar edge softly. Otherwise the TFT Module may be damaged.
10) At the insertion or removal of the Signal Interface Connector, be sure not to rotate nor tilt the Interface Connector of the TFT Module.
11) After installation of the TFT Module into an enclosure, do not twist nor bend the TFT Module even momentarily. While designing the enclosure, it should be taken into consideration that no bending/twisting forces are applied to the TFT Module from outside. Otherwise the TFT Module may be damaged.
12) Small amount of materials having no flammability grade is used in the LCD module. The LCD module should be supplied by power complied with requirements of Limited Power Source (IEC60950-1 or UL60950-1), or be applied exemption.

Provided by www.display-solution.com info@display-solution.com

2.0 General Description

This specification applies to the 18.5 inch-wide Color AHVA (IPS-like) TFT-LCD Module G185HAN01.0.The display supports the FHD [1920(H) x 1080(V)] screen format and 16.7M colors (True 8 bit). All input signals are LVDS interface comaptible.

2.1 Display Characteristics

The following items are characteristics summary on the table under 25°C condition:

ITEMS	Unit	SPECIFICATIONS
Screen Diagonal	[mm]	469.16(18.47”)
Active Area	[mm]	408.96 (H) x 230.04 (V)
Pixels H x V		1920x1080
Pixel Pitch	[um]	213 (per one triad) × 213
Pixel Arrangement		R.G.B. Vertical Stripe
Display Mode		AHVA mode, Normally black
White Luminance (Center)	[cd/m^2]	350 cd/m^2 (Typ.)
Contrast Ratio		1000 (Typ.)
Optical Response Time	[msec]	20ms
Nominal Input Voltage VDD	[Volt]	5 V (Typ)
Power Consumption (VDD line + LED line)	[Watt]	16.5W
Weight	[Grams]	1200 (Typ)
Physical Size	[mm]	430.4 (W) x 254.6 (H) Typ. x 12.0(D)Typ
Electrical Interface		Dual LVDS
Support Color		16.7M colors, True 8 bit
Surface Treatment		Anti-Glare, 3H
RoHS Compliance		RoHS Compliance
Temperature Range Operating Storage (Shipping)	 [°C] [°C]	 -20~ 70 -20~ 70

Provided by www.display-solution.com info@display-solution.com

2.2 Optical Characteristics

The optical characteristics are measured under stable conditions at 25 °C:

Item	Unit	Conditions	Min.	Typ.	Max.	Note
Viewing Angle	[degree]	Horizontal (Right) CR >10 (Left)		89 89	- -	*2*
		Vertical (Up) CR > 10 (Down)		89 89	- -	
Contrast ratio		Normal Direction	800	1000	-	*3*
Response Time	[msec]	Raising Time (T_{rR})		10	20	*4*
		Falling Time (T_{rF})		10	20	
		Raising + Falling		20	40	
Color / Chromaticity Coordinates (CIE)		Red x	0.596	0.646	0.696	*5*
		Red y	0.283	0.333	0.383	
		Green x	0.255	0.305	0.355	
		Green y	0.565	0.615	0.665	
		Blue x	0.105	0.155	0.205	
		Blue y	0.010	0.060	0.110	
Color Coordinates (CIE) White		White x	0.249	0.299	0.349	
		White y	0.265	0.315	0.365	
Central Luminance	[cd/m^2]		280	350		*6*
Luminance Uniformity	[%]		80	85		*7*
Color Gamut	%			70		

Provided by www.display-solution.com info@display-solution.com

***Note 1:* Measurement method**

The LCD module should be stabilized at given temperature for 30 minutes to avoid abrupt temperature change during measuring (at surface 35°C). In order to stabilize the luminance, the measurement should be executed after lighting Backlight for 30 minutes in a stable, windless and dark room.

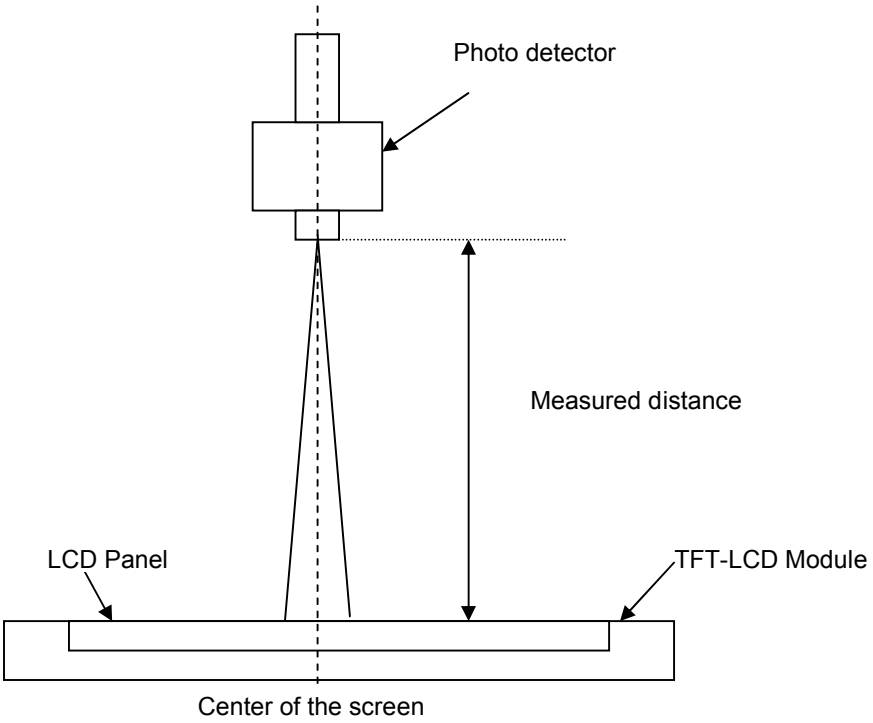

***Note 2:* Definition of viewing angle** measured by ELDIM (EZContrast 88)

Viewing angle is the measurement of contrast ratio ≧10, at the screen center, over a 180° horizontal and 180° vertical range (off-normal viewing angles). The 180° viewing angle range is broken down as follows; 90° (θ) horizontal left and right and 90° (Φ) vertical, high (up) and low (down). The measurement direction is typically perpendicular to the display surface with the screen rotated about its center to develop the desired measurement viewing angle.

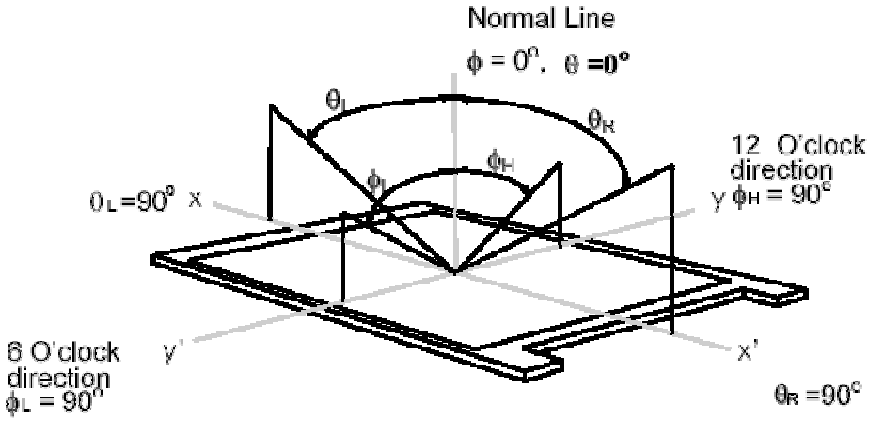

***Note 3:* Contrast ratio is** measured by TOPCON SR-3

Provided by www.display-solution.com info@display-solution.com

***Note 4:* Definition of Response time** measured by Westar TRD-100A

The output signals of photo detector are measured when the input signals are changed from "Full Black" to "Full White" (rising time, Tr_R), and from "Full White" to "Full Black" (falling time, Tf_F), respectively. The response time is interval between the 10% and 90% (1 frame at 60 Hz) of amplitudes.
$Tr_R + Tf_F$ = 5 msec (typ.).

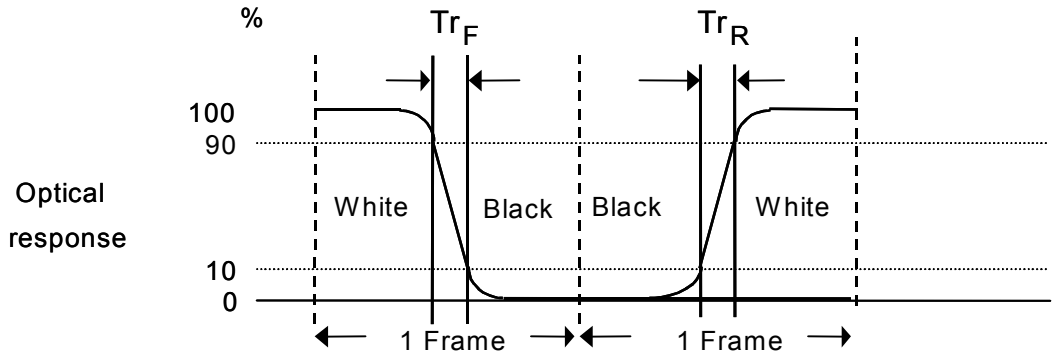

***Note 5:* Color chromaticity and coordinates (CIE) is** measured by TOPCON SR-3

***Note 6*: Central luminance is** measured by TOPCON SR-3

***Note 7:* Luminance uniformity of these 9 points is defined as below and** measured by TOPCON SR-3

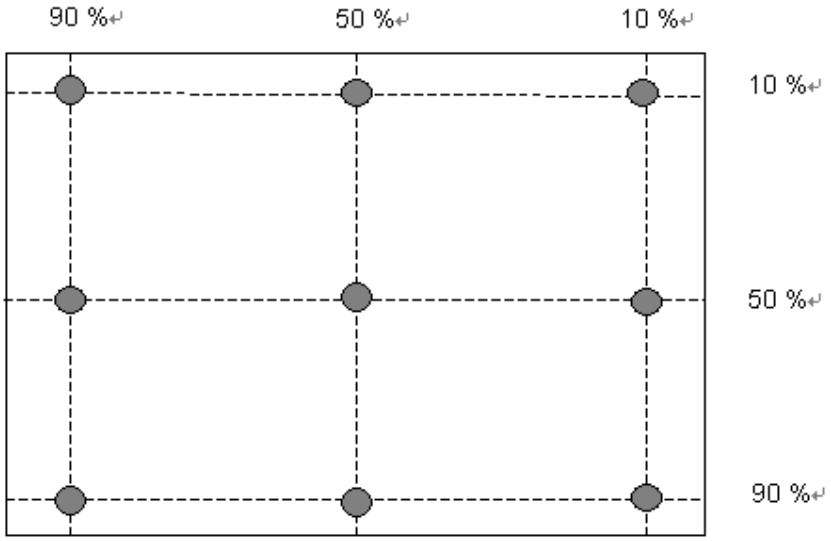

$$\text{Uniformity} = \frac{\text{Minimum Luminance in 9 points (1 - 9)}}{\text{Maximum Luminance in 9 Points (1 - 9)}}$$

Provided by www.display-solution.com info@display-solution.com

3.0 Functional Block Diagram

The following diagram shows the functional block of the 18.5 inch Color TFT-LCD Module:

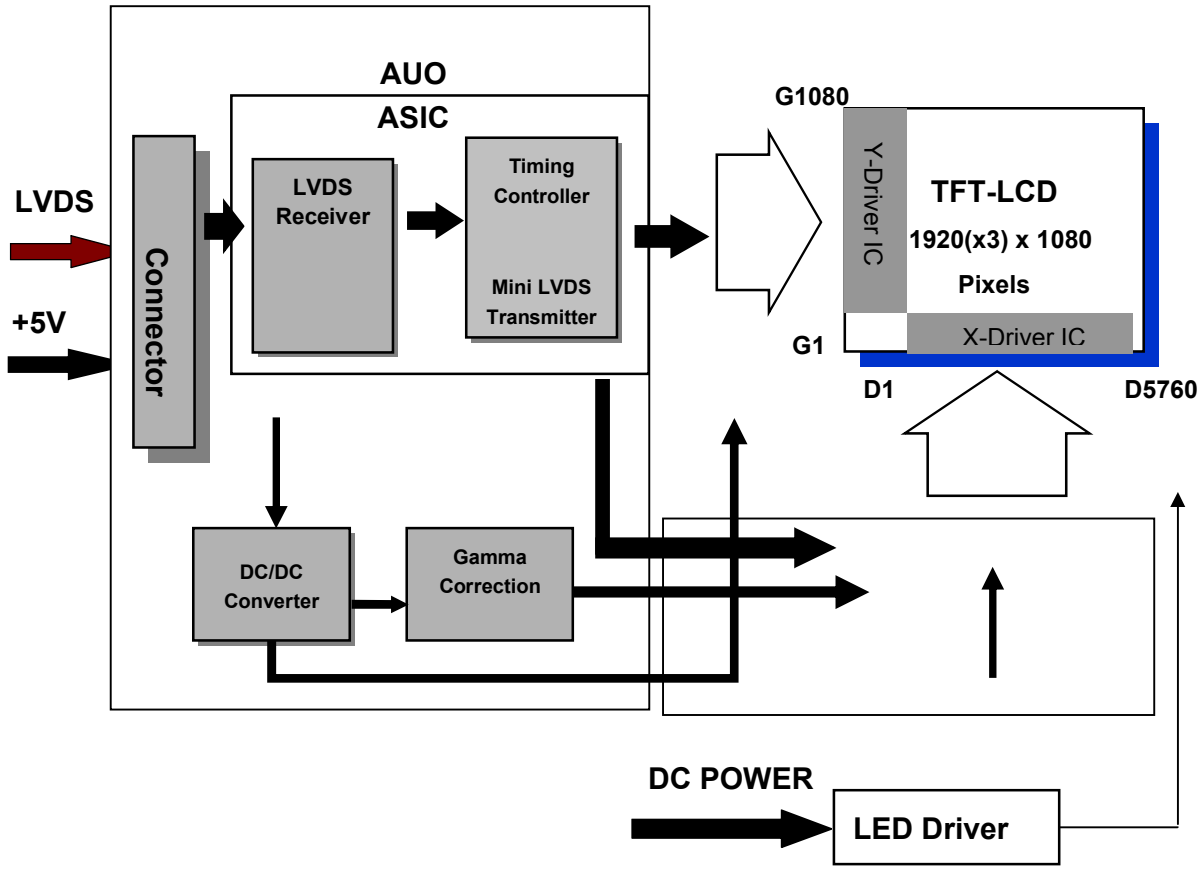

I/F PCB Interface:

FI-XB30SSRLA-HF-16-R3500 (JAE)

Mating Type:

FI-X30HL or FI-X30C2L-NPB

Provided by www.display-solution.com info@display-solution.com

4.0 Absolute Maximum Ratings

Absolute maximum ratings of the module are as following:

4.1 TFT LCD Module

Item	Symbol	Min	Max	Unit	Conditions
Logic/LCD Drive Voltage	VDD	-0.3	+5.5	[Volt]	***Note 1,2***

4.2 Absolute Ratings of Environment

Item	Symbol	Min.	Max.	Unit	Conditions
Operating Temperature	TOP	-20	70	[°C]	***Note 3 & 4***
Operation Humidity	HOP	5	95	[%RH]	
Storage Temperature	TST	-20	70	[°C]	
Storage Humidity	HST	5	95	[%RH]	

Note 1: With in Ta (25°C)
Note 2: Permanent damage to the device may occur if exceeding maximum values
Note 3: For quality perfermance, please refer to AUO IIS(Incoming Inspection Standard).
Note 4: Operation Temperature +70°C is defined as panel surface termperature.

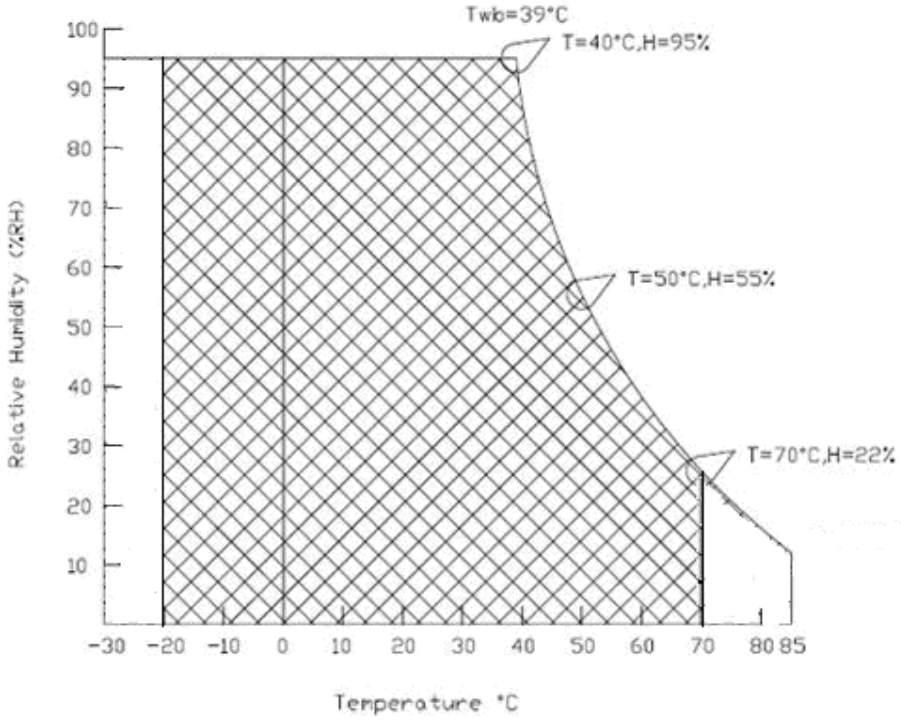

Provided by www.display-solution.com info@display-solution.com

5.0 Electrical characteristics

5.1 TFT LCD Module

5.1.1 Power Specification

Input power specifications are as follows:

Symbol	Parameter	Min	Typ	Max	Unit	Conditions
VDD	Logic/LCD Drive Voltage	4.5	5.0	5.5	[Volt]	+/-10%
IDD	Input Current	-	0.8	1	[A]	VDD= 5.0V, All White Pattern At 60Hz,
PDD	VDD Power	-	4	5.5	[Watt]	VDD= 5.0V, All White Pattern At 60Hz
IRush	Inrush Current	-	2.7	3.4	[A]	Note 1
VDDrp	Allowable Logic/LCD Drive Ripple Voltage	-	-	300	[mV] p-p	VDD= 5.0V, All White Pattern At 60Hz

Note 1: Measurement conditions:

The duration of rising time of power input is 470us.

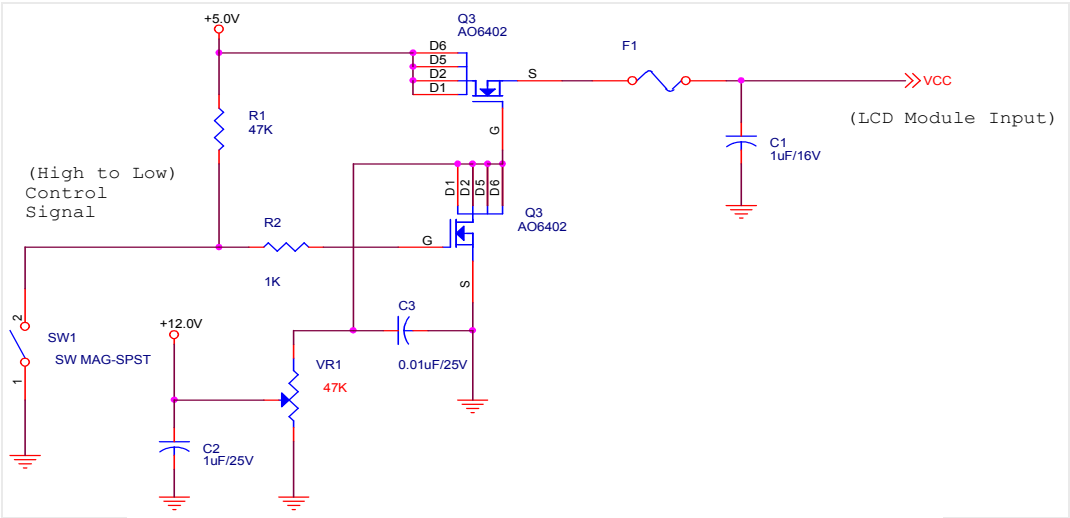

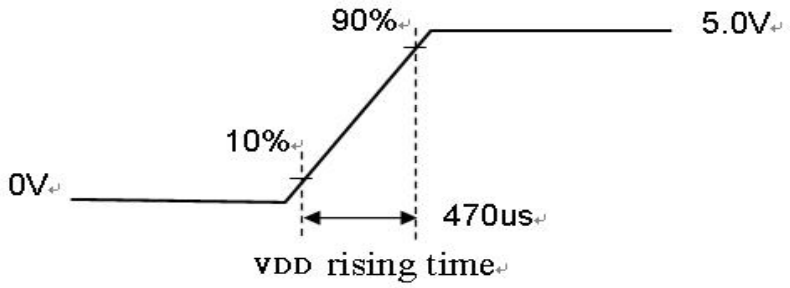

Provided by www.display-solution.com info@display-solution.com

5.1.2 Signal Electrical Characteristics

Input signals shall be low or Hi-Z state when VDD is off. Please refer to specifications of SN75LVDS82DGG (Texas Instruments) in detail.

Characteristics of each signal are as follows:

Symbol	Parameter	Min	Typ	Max	Units	Condition
VTH	Differential Input High Threshold	-		100	[mV]	VICM = 1.2V ***Note 1***
VTL	Differential Input Low Threshold	-100		-	[mV]	VICM = 1.2V ***Note 1***
|VID|	Input Differential Voltage	100	400	600	[mV]	***Note 1***
VICM	Differential Input Common Mode Voltage	1.125	-	1.375	[V]	VTH-VTL = 200MV (max) ***Note 1***

Note 1: LVDS Signal Waveform

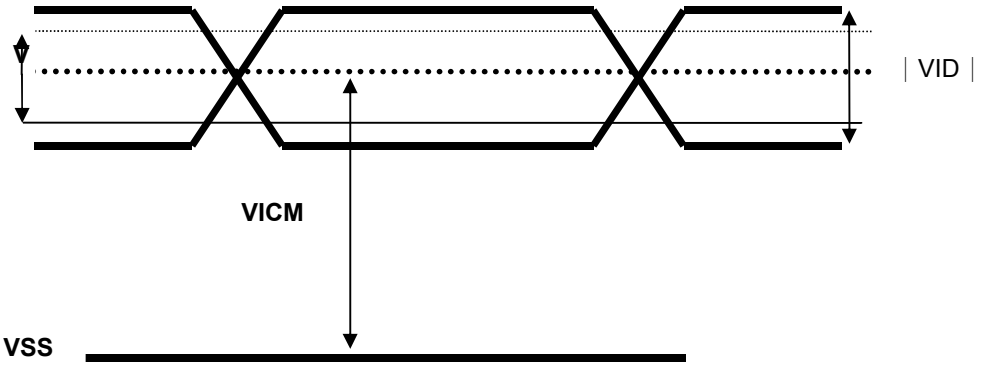

Provided by www.display-solution.com info@display-solution.com

5.2 Backlight Unit

Following characteristics are measured under a stable condition at 25 °C (Room Temperature):

Symbol	Parameter	Min.	Typ.	Max.	Unit	Remark
VCC	Input Voltage	10.8	12	13.2	[Volt]	
I_{VCC}	Input Current		1.04		[A]	100% PWM Duty
P_{VCC}	Power Consumption		12.5	13.6	[Watt]	100% PWM Duty
Irush LED	Inrush Current	-		3	[A]	at rising time=470us
VLED on/off	On Control Voltage	3	5	5.5	Volt	
	Off Control Voltage			0.8	Volt	
F_{PWM}	Dimming Frequency	200	-	20k	[Hz]	
	Swing Voltage	3	3.3	5	V	
	High Voltage	3	3.3	5	Volt	
	Low Voltage			0.8	Volt	
	Dimming Duty Cycle	5	-	100	%	
I_F	LED Forward Current		55		mA	Ta = 25 °C
V_F	LED Forward Voltage	-	3.2	3.6	Volt	I_F 55=mA, Ta = 25°C
P_{LED}	LED Power Consumption	-		12.5	Watt	I_F 55=mA, Ta = 25°C
Operation Lifetime		50,000			Hrs	I_F55=mA, Ta= 25°C

Note 1: Ta means ambient temperature of TFT-LCD module.

Note 2: VCC, Ivcc, P_{VCC} , Irush LED are defined for LED B/L.(100% duty of PWM dimming)

Note 3: I_F, V_F , P_{LED} are defined for single LED.

Note 4: If G185HAN01.0 module is driven by high current or at high ambient temperature & humidity condition. The operating life will be reduced.

Note 5: Operation life means brightness goes down to 50% initial brightness. Minimum operating life time is estimated data.

Note 6: Each LED light bar consists of 63 pcs LED package (7 strings x 9 pcs / string)

Provided by www.display-solution.com info@display-solution.com

6.0 Signal Characteristic

6.1 Pixel Format Image

Following figure shows the relationship of the input signals and LCD pixel format.

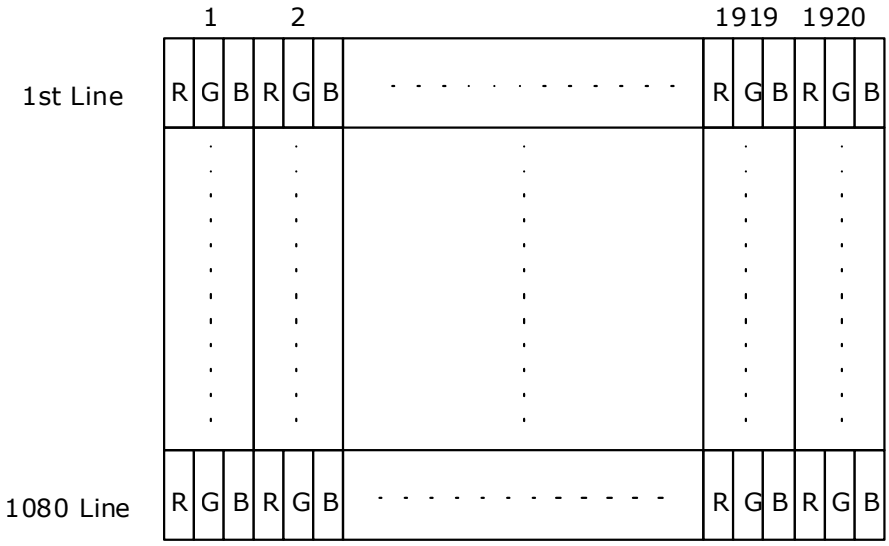

Provided by www.display-solution.com info@display-solution.com

6.2 The input data format

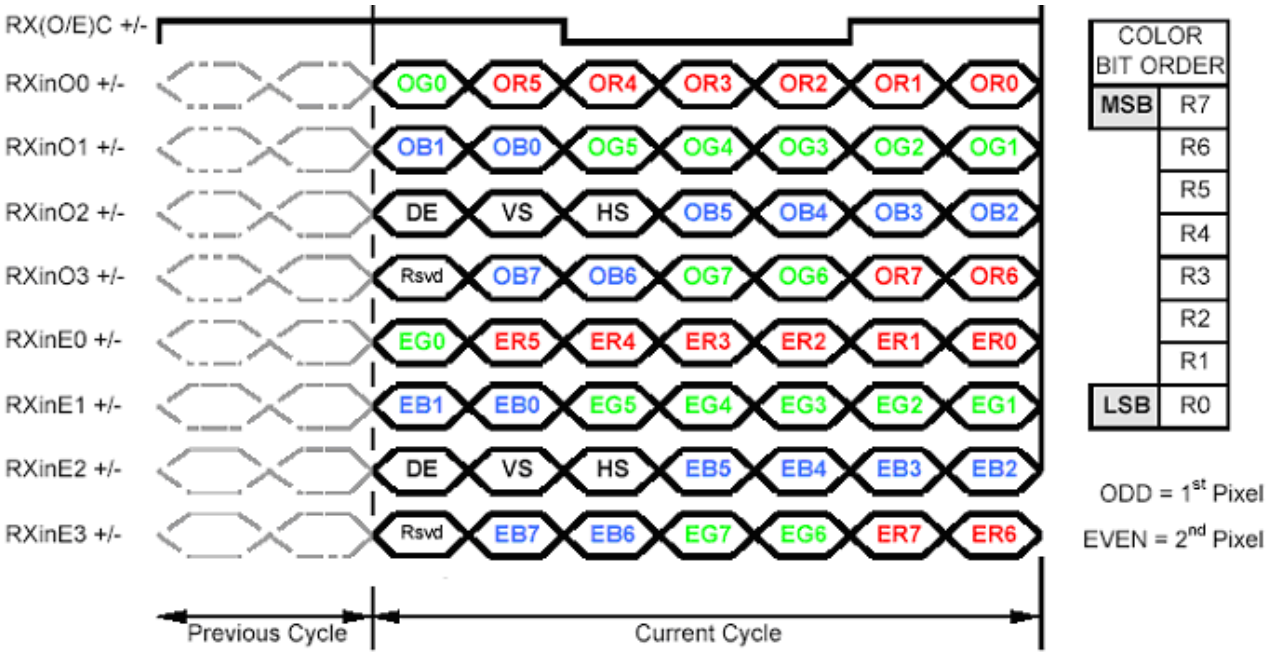

Note1: Normally DE mode only. VS and HS on EVEN channel are not used.

Note2: Please follow VESA.

Note3: 8-bits signal input.

Provided by www.display-solution.com info@display-solution.com

6.3 Signal Description

The module using a pair of LVDS receiver **SN75LVDS82** / **SN75LVDS83** (Texas Instruments) or compatible. LVDS is a differential signal technology for LCD interface and high speed data transfer device. Transmitter shall be SN75LVDS83(negative edge sampling) or compatible**.** The first LVDS port(RxOxxx) transmits odd pixels while the second LVDS port(RxExxx) transmits even pixels.

PIN #	SIGNAL NAME	DESCRIPTION
1	RXOIN0-	Negative LVDS differential data input (Odd data)
2	RXOIN0+	Positive LVDS differential data input (Odd data)
3	RXOIN1-	Negative LVDS differential data input (Odd data)
4	RXOIN1+	Positive LVDS differential data input (Odd data)
5	RXOIN2-	Negative LVDS differential data input (Odd data, H-Sync,V-Sync,DSPTMG)
6	RXOIN2+	Positive LVDS differential data input (Odd data, H-Sync,V-Sync,DSPTMG)
7	GND	Power Ground
8	RXOCLKIN-	Negative LVDS differential clock input (Odd clock)
9	RXOCLKIN+	Positive LVDS differential clock input (Odd clock)
10	RXOIN3-	Negative LVDS differential data input (Odd data)
11	RXOIN3+	Positive LVDS differential data input (Odd data)
12	RXEIN0-	Negative LVDS differential data input (Even data)
13	RXEIN0+	Positive LVDS differential data input (Even data)
14	GND	Power Ground
15	RXEIN1-	Negative LVDS differential data input (Even data)
16	RXEIN1+	Positive LVDS differential data input (Even data)
17	GND	Power Ground
18	RXEIN2-	Negative LVDS differential data input (Even data)
19	RXEIN2+	Positive LVDS differential data input (Even data)
20	RXECLKIN-	Negative LVDS differential clock input (Even clock)
21	RXECLKIN+	Positive LVDS differential clock input (Even clock)
22	RXEIN3-	Negative LVDS differential data input (Even data)
23	RXEIN3+	Positive LVDS differential data input (Even data)
24	GND	Power GND
25	NC	NC
26	NC	NC
27	NC	NC
28	VDD	+5.0V Power Supply
29	VDD	+5.0V Power Supply
30	VDD	+5.0V Power Supply

Provided by www.display-solution.com info@display-solution.com

Note1: Start from left side

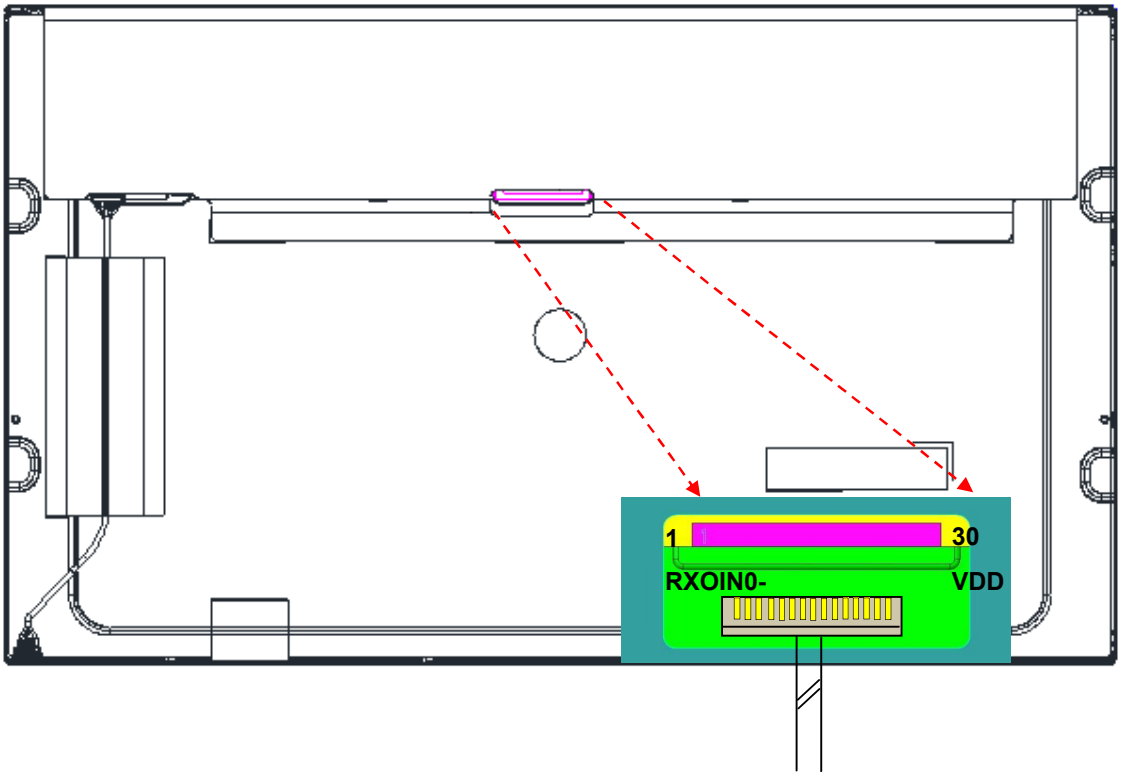

Note2: Input signals of clock shall be the same timing.

Note3: Please follow TV VESA Pin Assignment.

Provided by www.display-solution.com info@display-solution.com

6.4 Timing Characteristics

Signal	Item	Symbol	Min	Typ	Max	Unit
V-section	Period	Tv	1090	1100	1160	Th
	Active	Tdisp(v)	1080	1080	1080	Th
	Blanking	Tbp(v)+Tfp(v)+PWvs	10	20	80	Th
H-section	Period	Th	1000	1088	1120	Tclk
	Active	Tdisp(h)	960	960	960	Tclk
	Blanking	Tbp(h)+Tfp(h)+PWhs	40	128	160	Tclk
Clock	Period	Tclk	11.76	13.89	15.38	ns
	Frequency	Freq.	60	72	87.5	MHz
Frame Rate	Frame Rate	1/Tv	50	60	75	Hz

Note 1: Only DE mode operation.
The input of Hsync & Vsync signal does not have an effect upon the LCD normal operation.
Note 2: The performance of the electro-optical characteristics may be influenced by variance of the vertical
refresh rates.
Note 3: Horizontal period should be even.

Provided by www.display-solution.com info@display-solution.com

6.5 Timing diagram

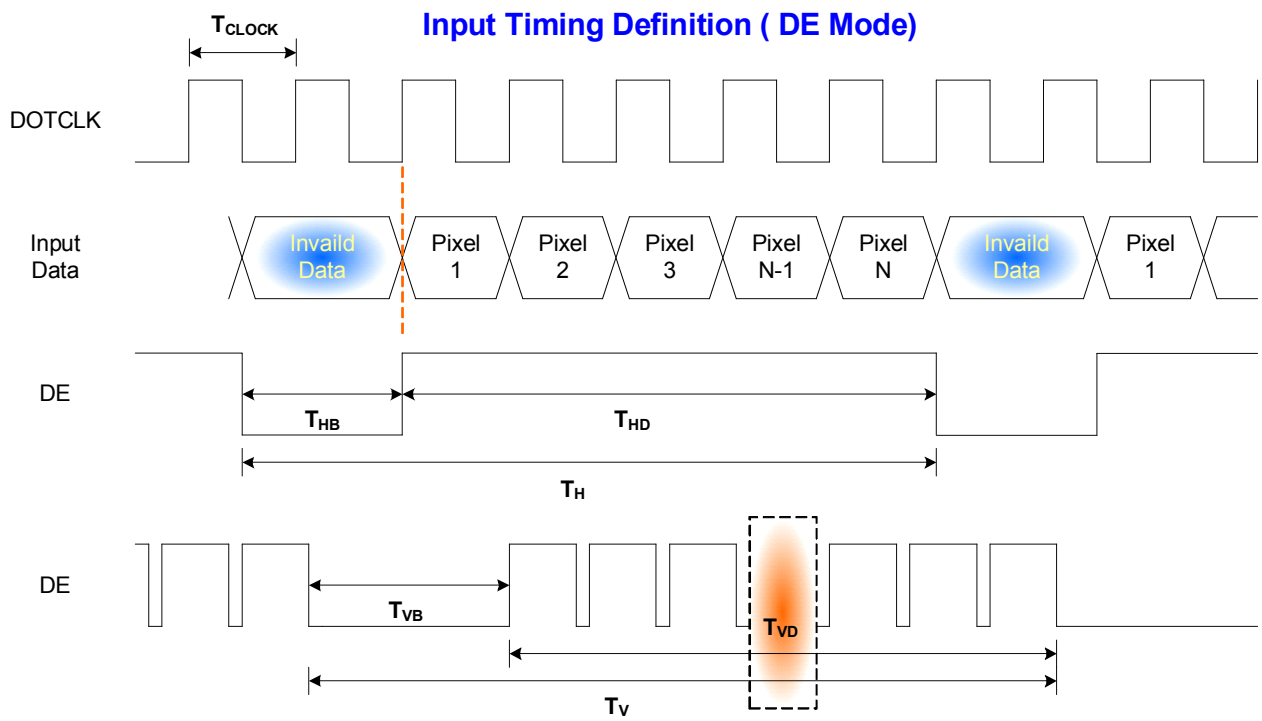

Provided by www.display-solution.com info@display-solution.com

6.6 Power ON/OFF Sequence

VDD power and LED on/off sequence are as follows. Interface signals are also shown in the chart. Signals from any system shall be Hi-Z state or low level when VDD is off.

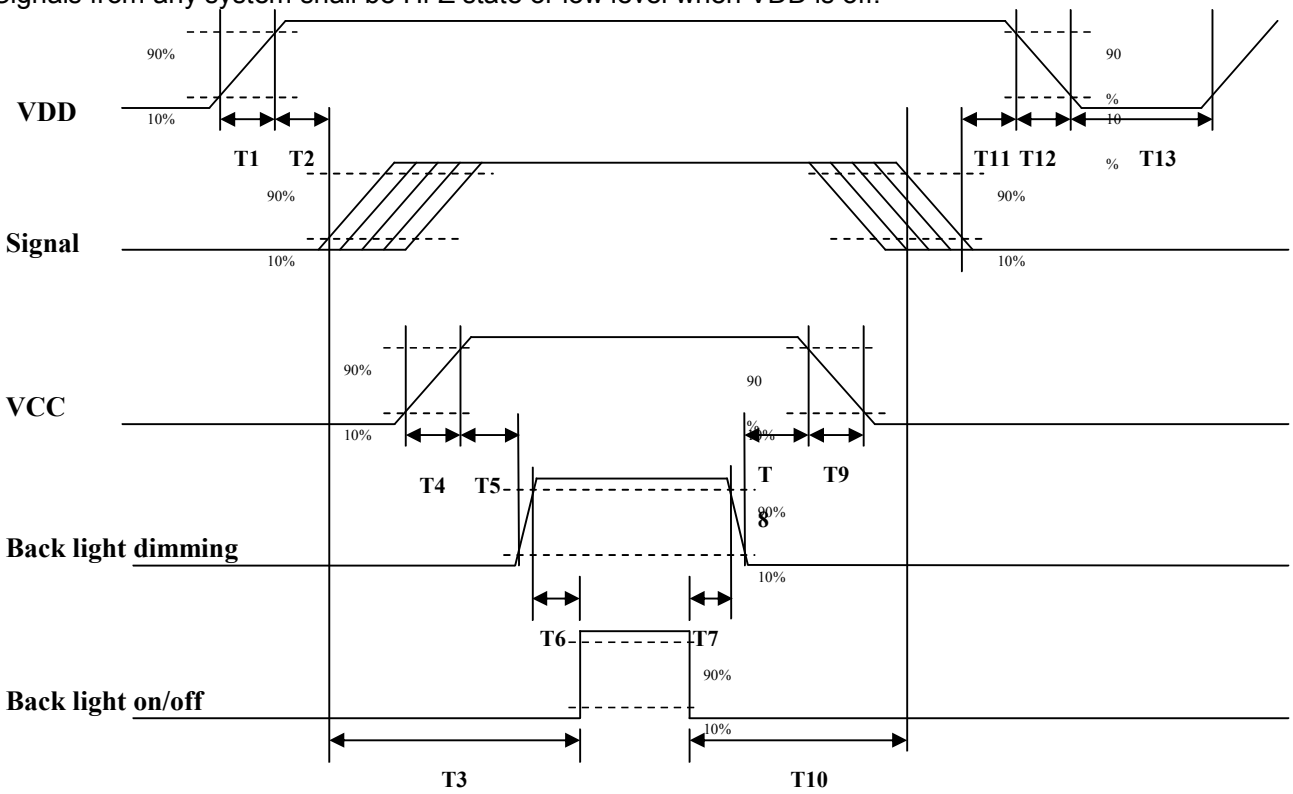

Power ON/OFF sequence timing

Parameter	Value			Units
	Min.	Typ.	Max.	
T1	0.5	-	10	[ms]
T2	0	40	50	[ms]
T3	200	-	-	[ms]
T4	0.5	-	10	[ms]
T5	10	-	-	[ms]
T6	10	-	-	[ms]
T7	0	-	-	[ms]
T8	10	-	-	[ms]
T9	-	-	10	[ms]
T10	110	-	-	[ms]
T11	0.5	16	50	[ms]
T12	-	-	100	[ms]
T13	1000	-	-	[ms]

Provided by www.display-solution.com info@display-solution.com

7.0 Connector & Pin Assignment

Physical interface is described as for the connector on module. These connectors are capable of accommodating the following signals and will be following components.

7.1 TFT LCD Module

Connector Name / Designation	Interface Connector / Interface card
Manufacturer	JAE
Type Part Number	FI-XB30SSRLA-HF-16-R3500 (JAE)
Mating Housing Part Number	FI-X30HL or FI-X30C2L-NPB

7.1.1 Pin Assignment

Pin#	Signal Name	Pin#	Signal Name
1	RxOIN0-	2	RxOIN0+
3	RxOIN1-	4	RxOIN1+
5	RxOIN2-	6	RxOIN2+
7	VSS	8	RxOCLKIN-
9	RxOCLKIN+	10	RxOIN3-
11	RxOIN3+	12	RxEIN0-
13	RxEIN0+	14	VSS
15	RxEIN1-	16	RxEIN1+
17	VSS	18	RxEIN2-
19	RxEIN2+	20	RxECLKIN-
21	RxECLKIN+	22	RxEIN3-
23	RxEIN3+	24	VSS
25	NC	26	NC
27	NC	28	VCC
29	VCC	30	VCC

7.2 LED Backlight Unit: LED Driver Connector

Connector Name / Designation	LED Connector
Manufacturer	E&T or compatible
Connector Model Number	3808K-F05N-12R or compatible
Mating Connector Model Number	H208K-P05N-02B or compatible

Provided by www.display-solution.com info@display-solution.com

7.3 LED Driver Connector Pin Assignment

Pin#	Symbol	Signal Name
1	VCC	12V
2	GND	GND
3	Enable	5V-On / 0V-Off
4	Dimming	PWM Dimming
5	NC	NC

Provided by www.display-solution.com info@display-solution.com

8.0 Reliability Test

Environment test conditions are listed as following table.

Items	Required Condition	Note
Temperature Humidity Bias (THB)	Ta= 50°C, 80%RH, 300hours	
High Temperature Operation (HTO)	Ta= 70°C, 300hours	
Low Temperature Operation (LTO)	Ta= -20°C, 300hours	
High Temperature Storage (HTS)	Ta= 70°C, 300hours	
Low Temperature Storage (LTS)	Ta= -20°C, 300hours	
Vibration Test (Non-operation)	Acceleration: 1.5 G Wave: Random Frequency: 10 - 200 Hz Sweep: 30 Minutes each Axis (X, Y, Z)	
Shock Test (Non-operation)	Acceleration: 50 G Wave: Half-sine Active Time: 20 ms Direction: ±X, ±Y, ±Z (one time for each Axis)	
Drop Test	Height: 60 cm, package test	
Thermal Shock Test (TST)	-20°C /30min, 60°C /30min, 100 cycles	***1***
On/Off Test	On/10sec, Off/10sec, 30,000 cycles	
ESD (Electro Static Discharge)	Contact Discharge: ± 8KV, 150pF(330Ω) 1sec, 8 points, 25 times/ point.	***2***
	Air Discharge: ± 15KV, 150pF(330Ω) 1sec 8 points, 25 times/ point.	
Altitude Test	Operation:10,000 ft Non-Operation:30,000 ft	

Note 1: The TFT-LCD module will not sustain damage after being subjected to 100 cycles of rapid temperature change. A cycle of rapid temperature change consists of varying the temperature from -20°C to 60°C, and back again. Power is not applied during the test. After temperature cycling, the unit is placed in normal room ambient for at least 4 hours before power on.

Note 2: According to EN61000-4-2 , ESD class B: Some performance degradation allowed. No data lost. Self-recoverable. No hardware failures.

Provided by www.display-solution.com info@display-solution.com

9.0 Shipping Label & Packaging

9.1 Shipping Label

The label is on the panel as shown below:

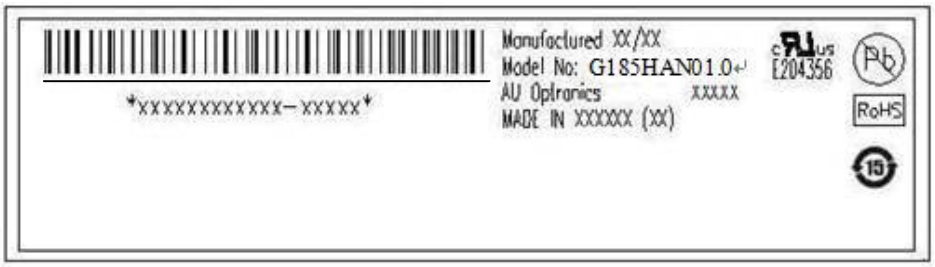

Note 1: For Pb Free products, AUO will add for identification.

Note 2: For RoHS compatible products, AUO will add for identification.

Note 3: For China RoHS compatible products, AUO will add for identification.

Note 4: The Green Mark will be presented only when the green documents have been ready by AUO Internal Green Team.

Provided by www.display-solution.com info@display-solution.com

9.2 Packaging

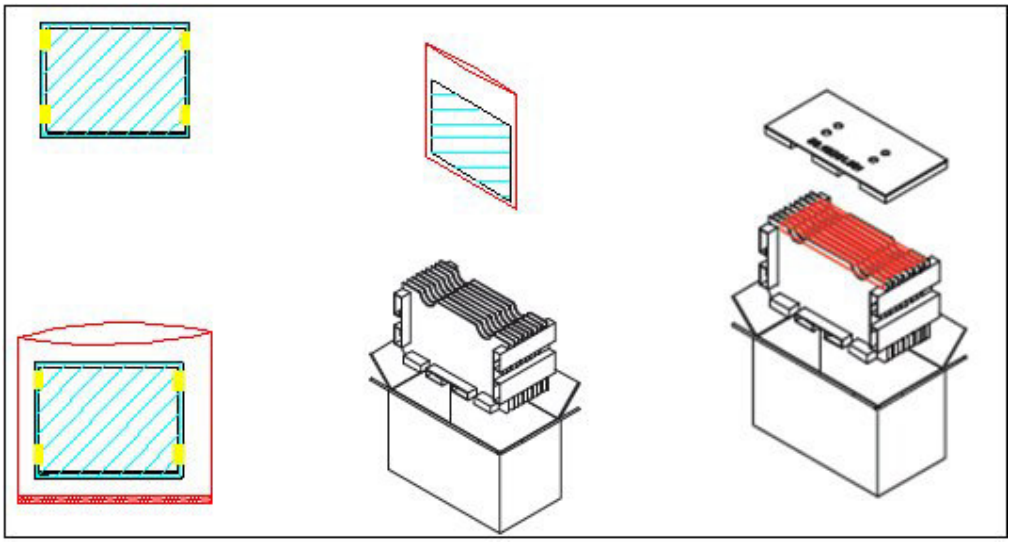

Max capacity：8 TFT-LCD module per carton

Max weight: 15.0 kg per carton

Outside dimension of carton: 520mm(L)* 280mm(W)*352mm(H)

Pallet size： 1140 mm *1060 mm * 135mm

Box stacked

By air_max：(2 *4) *4 layers，one pallet put 32 boxes，total 256pcs module

By sea_max：(2 *4) *4 layers + (2 *4) *1 layers , two pallet put 40 boxes，total320pcs module

By sea_HQ_max：(2 *4) *4 layers+(2 *4) *2 layers, two pallet put 48 boxes, total 384pcs module

For DATAMODUL Internal Use Only - Provided By pavelkonvalinka On 2016/07/06
Provided by www.display-solution.com info@display-solution.com

9.3 Palletizing

	MAX_SHIPPING BY AIR	MAX_SHIPPING BY SEA	MAX_SHIPPING BY SEA_HQ
MODULE/CARTON	8	8	8
CARTON/LAYER	8	8	8
LAYER/PALLET	4	4+1	4+2
MODULE/PALLET	256	320	384
CARTON SIZE(MM)	520(L)*280(W)*352(H)	520(L)*280(W)*352(H)	520(L)*280(W)*352(H)
PALLET SIZE(MM)	1140(L)*1060(W)*140(H)	1140(L)*1060(W)*140(H)	1140(L)*1060(W)*140(H)
TOTAL PALLET HEIGHT(MM)	1548	2040	2392
TOTAL PALLET WEIGHT(KG)	493	626	746

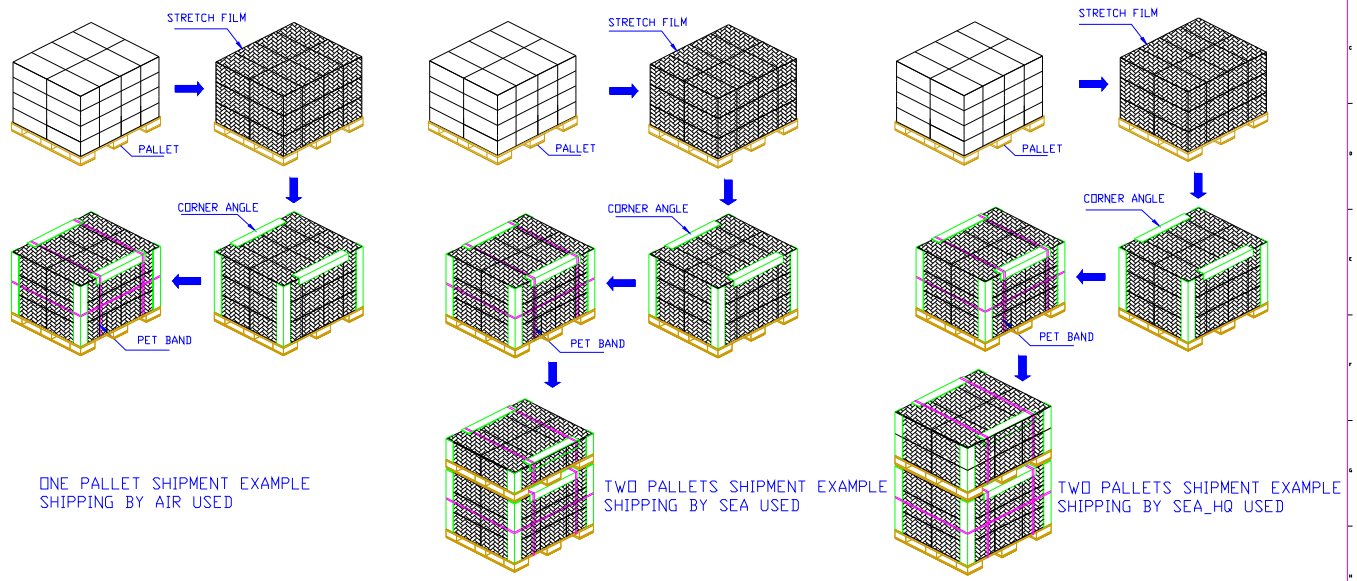

Provided by www.display-solution.com info@display-solution.com

10.0 Mechanical Characteristics

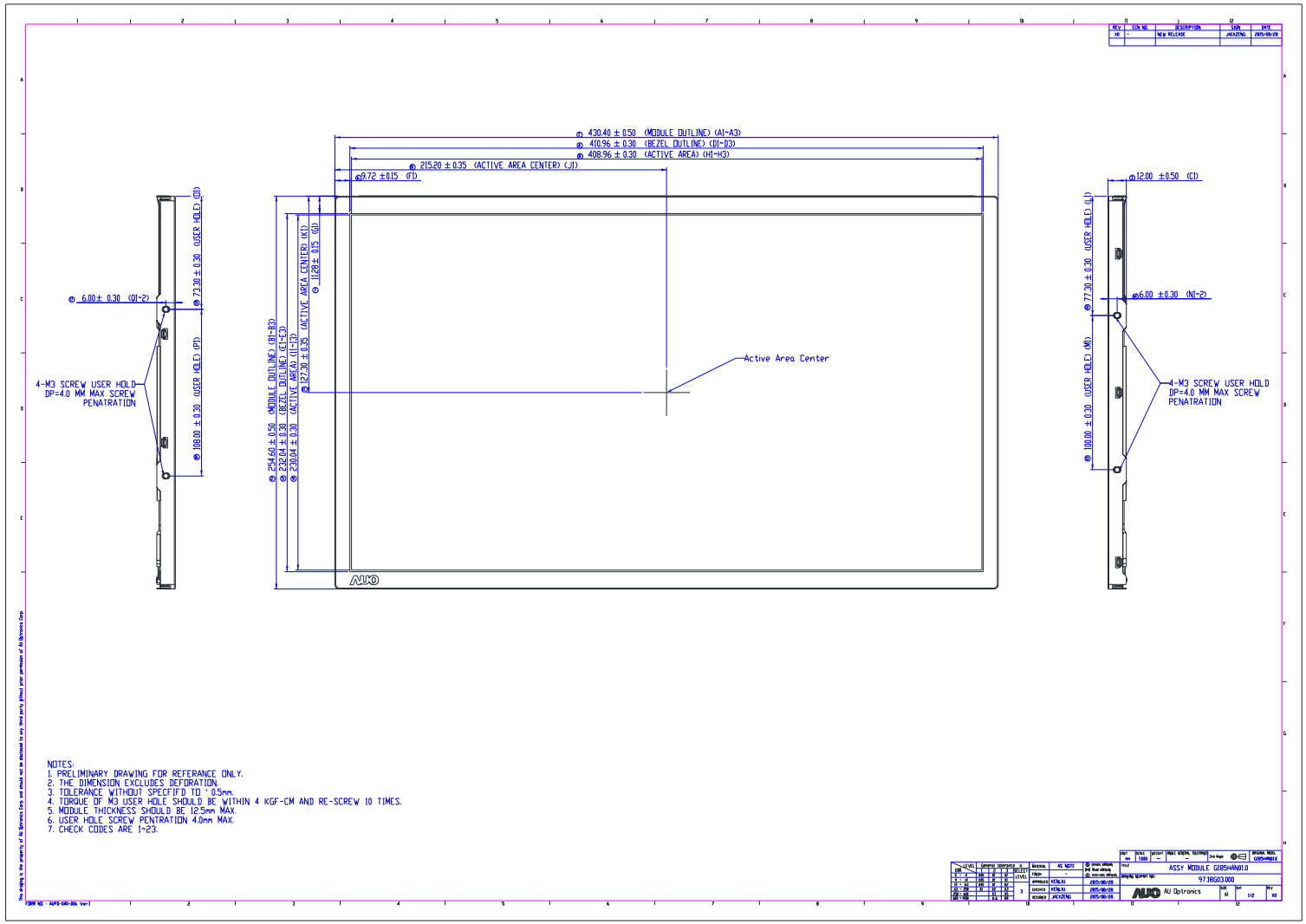

Provided by www.display-solution.com info@display-solution.com

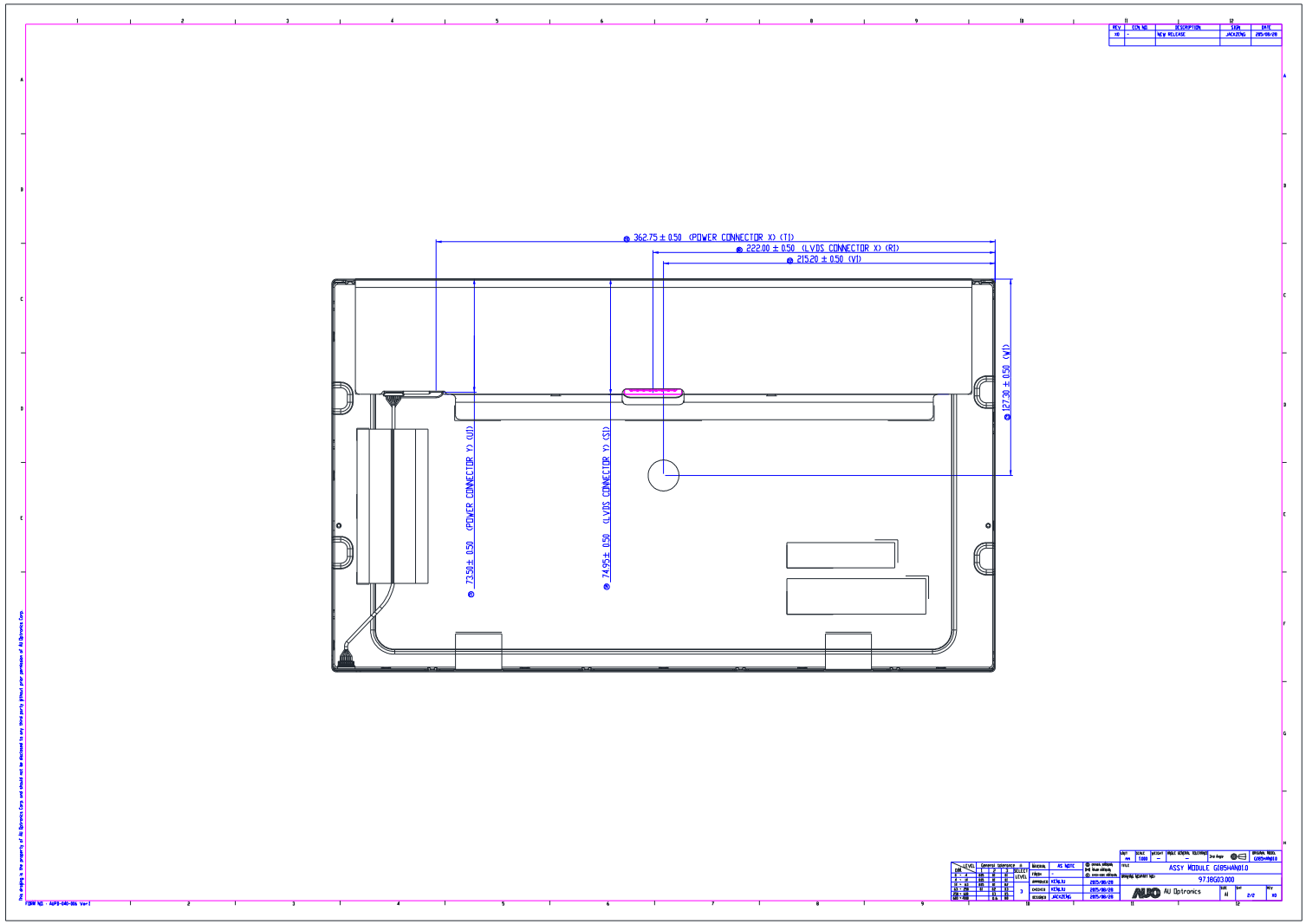

Provided by
www.display-solution.com
info@display-solution.com

11 Safety

11.1 Sharp Edge Requirements

There will be no sharp edges or comers on the display assembly that could cause injury.

11.2 Materials

11.2.1 Toxicity

There will be no carcinogenic materials used anywhere in the display module. If toxic materials are used, they will be reviewed and approved by the responsible AUO toxicologist.

11.2.2 Flammability

All components including electrical components that do not meet the flammability grade UL94-V1 in the module will complete the flammability rating exception approval process.

The printed circuit board will be made from material rated 94-V1 or better. The actual UL flammability rating will be printed on the printed circuit board.

11.3 Capacitors

If any polarized capacitors are used in the display assembly, provisions will be made to keep them from being inserted backwards.

11.4 National Test Lab Requirement

The display module will satisfy all requirements for compliance to:

UL 60950-1, Second Edition	U.S.A. Information Technology Equipment

Provided by www.display-solution.com info@display-solution.com